COMP4442

SERVICE AND CLOUD COMPUTING

Cloud Infrastructure

Hardware Resources and Physical Facilities

Cloud Infrastructure

- A cloud infrastructure is needed to host services and applications in the cloud. It is a term used to describe the hardware and software components that support the delivery of a cloud-based service
  - *Hardware resources*:
    - servers, storage and networking equipment that can be located at multiple geographical locations.
    - *Abstracted resources*: virtualized resources that are separated from physical hardware, and pooled for being allocated to users
  - *Physical facilities*:
    - datacenter facilities, electrical and mechanical equipment, etc

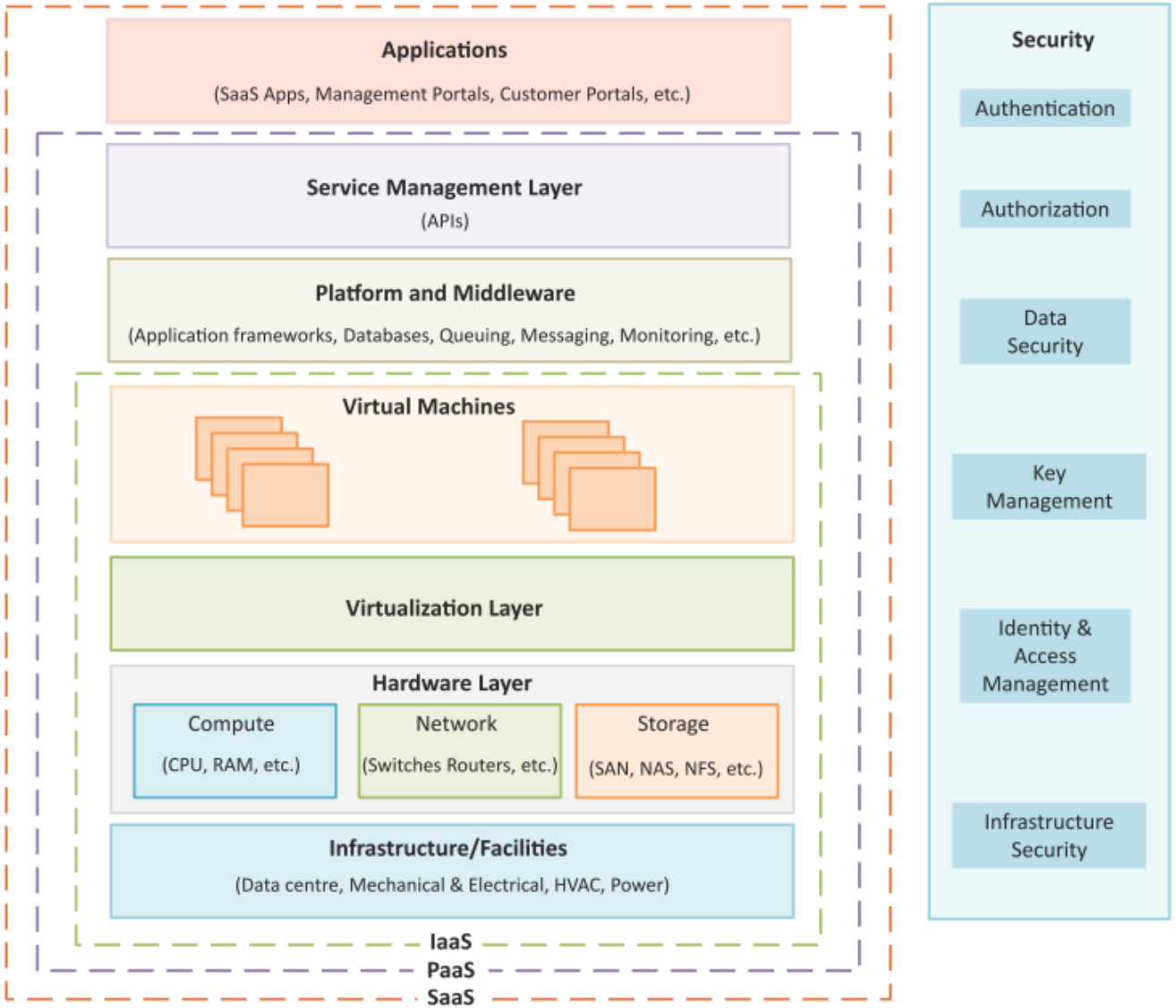

Hardware Resources

- Servers
  - Process, analyze, store, and transmit massive data
  - 3 different shapes: tower, rack, blade servers

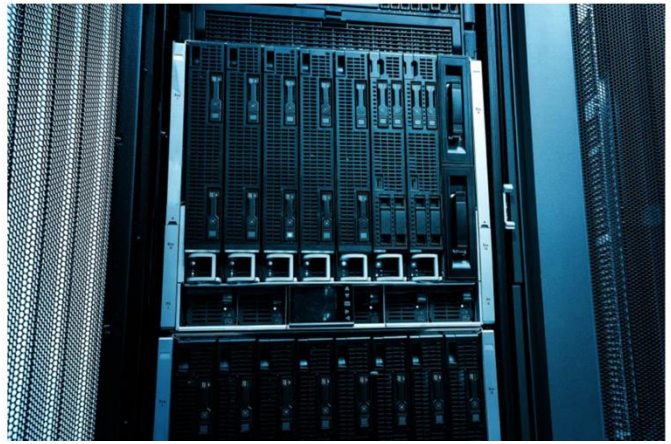

Hardware Resources

- Storage (Ch. 5 in reference book)
  - Store, access, and manage data
  - 3 major types:
    - Direct-Attached Storage (DAS),
    - Network-Attached Storage (NAS): file-level networked storage,
    - Storage Area Network (SAN): highspeed block-level storage network,
  - Storage protocols:
    - NFS + Ethernet for NAS,
    - Fibre-Channel (FC) + Fibre for SAN,
    - iSCSI over Ethernet for SAN

(a) EMC Symmetrix VMAX 40 K. (b) HP 3PAR StoreServ 10 000 storage. (c) Huawei OceanStor N8500. (d) NetApp FAS6200 series. (e) IBM System Storage N7950T.

Fig. 8. Storage systems in data centers.

Hardware Resources

- Switch
  - Connect and transmit data between servers
  - Core switch, aggregation switch, leaf switch / Top-of-Rack (ToR) switch..

(a) Cisco Nexus 7000 series data center switches.

(b) Cloud Engine 12 800 series high-performance switches.

(c) RG-N18000 series data center switches.

(d) Arista 7500E series data center switches.

(e) Cisco Nexus 3064 series switches.

(f) Arista 7050QX series data center switches.

Fig. 6. Switches in cloud data centers.

Hardware Resources

- Rack, cable, power, cooling, …

(a) Emerson Network Power DCF Optimized Racks.

(b) Siemon V600 Data Center Server Cabinet.

(c) Black Box Freedom Rack Plus with M6 Rails.

(d) PowerEdge 4820 Rack Enclosure.

(e) HP 11642 1075 Mm Shock Universal Rack.

Fig. 9. Five kinds of racks in cloud data centers.

Cloud Infrastructure vs. Cloud Architecture

Cloud infrastructure is the blocks to build a cloud.

Cloud architecture is the blueprint on how we'll build it.

A cloud architecture is how individual technologies are integrated to create cloud computing environments.

It is the way all the components (hardware, virtual resources, networks, OS, middleware, automation, management, …) are connected

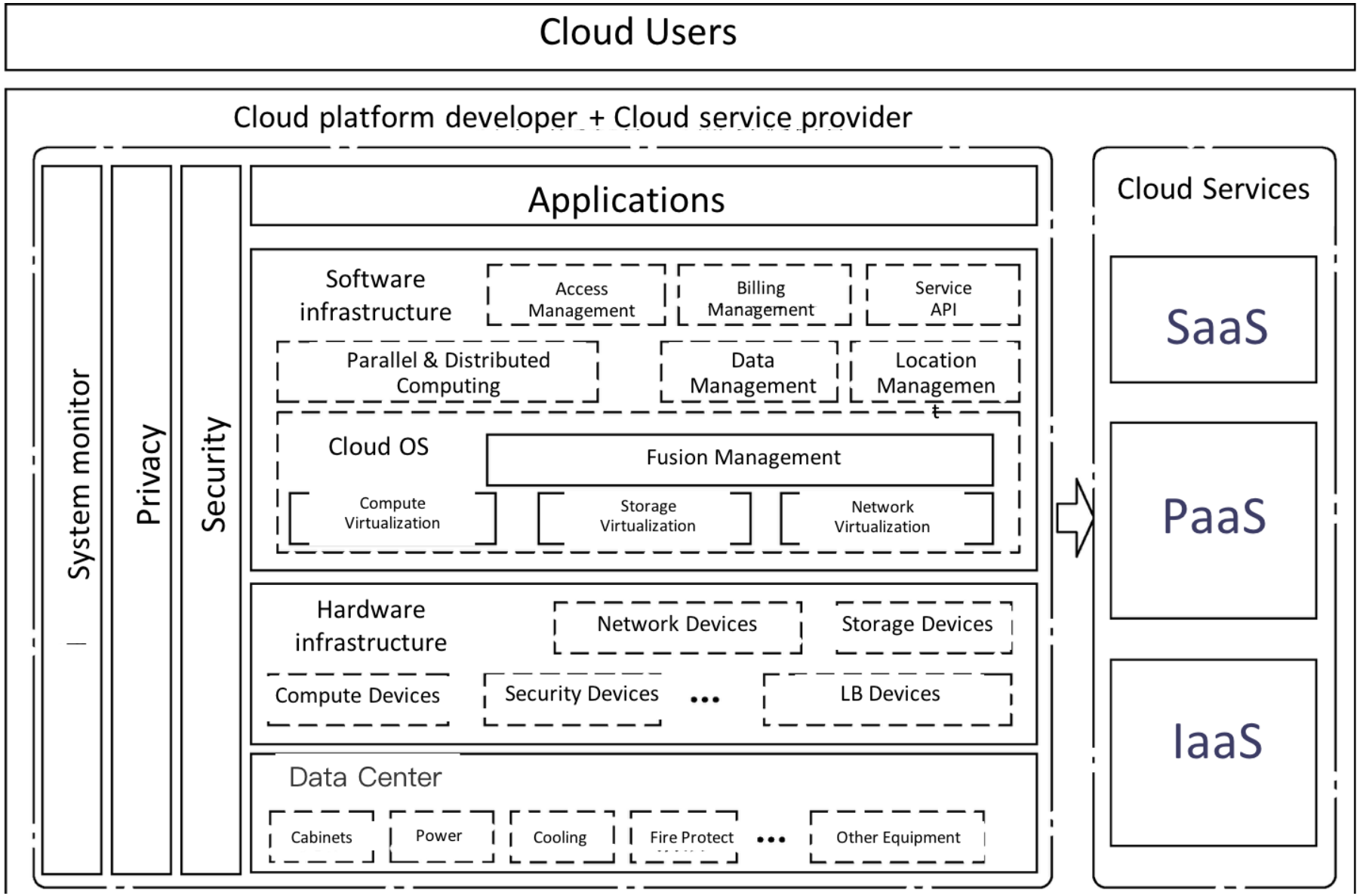

Physical vs. Cloud Resources

- Can you distinguish between physical servers and cloud servers?
- *Physical server*: dedicated computers which are usually hand-built hardware, arranged in a specific designed configuration
  - CPU type and speed, CPU cores, allocated RAM (memory), and disk space
  - If purposed for private use, can be fully customizable, more secure as well.
- *Cloud server*: a concept of a server that moves past the physical limitations of a traditional workstation/servers setup.
  - User's data and resources could spread across multiple devices in different locations, but users access them via an "application layer" that may appear as a single machine.
  - Accessing cloud server is done either via a "management portal," which is an interface that gives user access to services on your cloud server
  - Controlled by underlying virtualization software, supporting scalability, load balance, fault tolerance, etc.

Server Clusters

- A server cluster consists of a collection of nodes interconnected via a computer network.
  - Each node is an independent computer system and can only access its own local memory.
  - Nodes can be ordinary PCs containing commodity hardware, workstations, servers or supercomputers
  - With just a few nodes, inexpensive computer network technologies (Fast or Giga-Ethernet) are used; With several hundred nodes high-speed computer networks (e.g. InfiniBand) are required
- From the user's perspective, the cluster works like a single system.

Blades (IBM HS)

Server Clusters

- Architecture of a cluster system

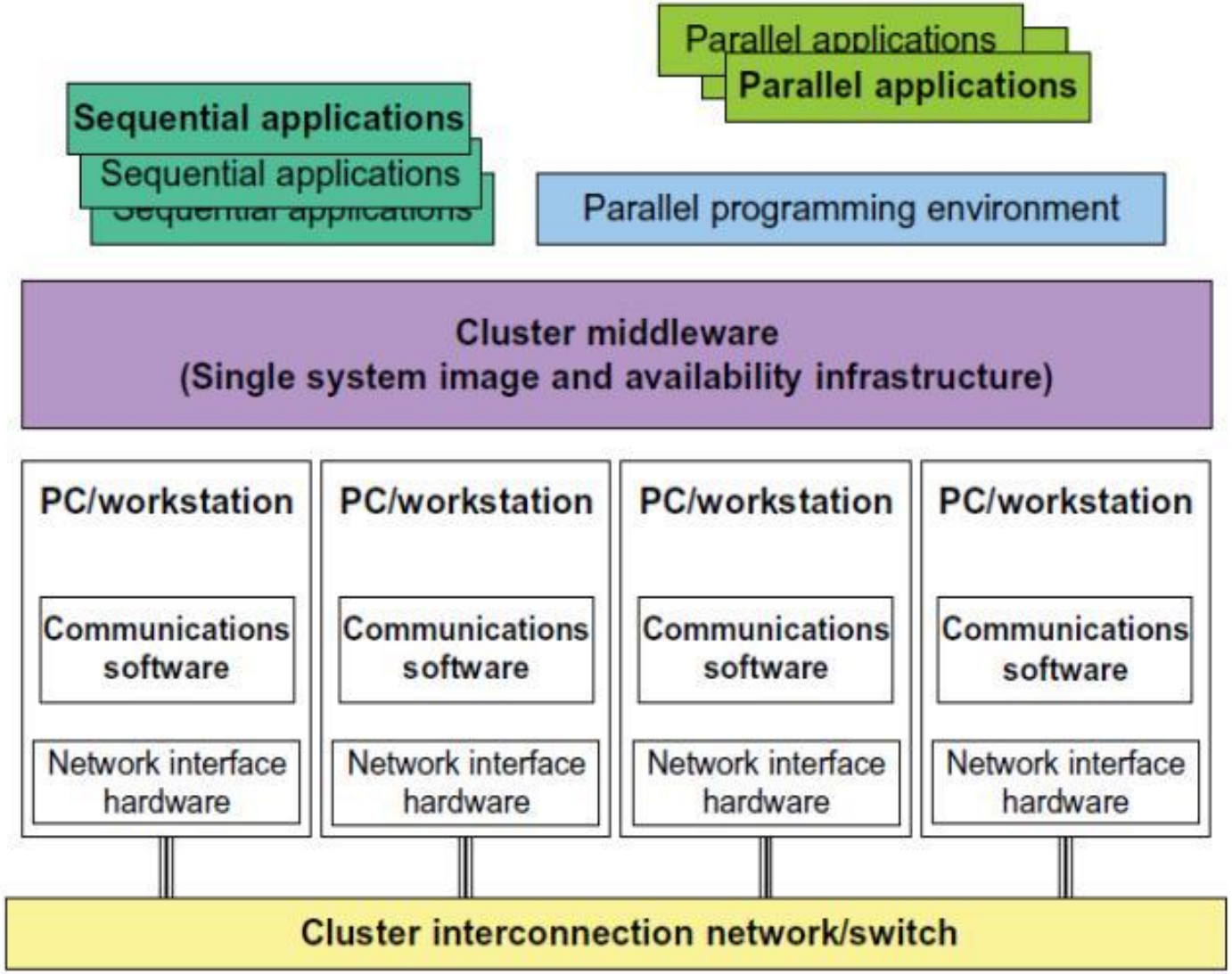

Server Clusters

- Two configurations of clusters:
  - Shared nothing
    - Each node has its own storage resource
    - Q&A Pros and Cons?
  - Shared storage
    - All nodes are attached to a shared storage and have access to a shared storage
    - NAS:
      Provides file system-level access to storage devices via the network
      Can also be implemented as a pure software solution
    - SAN:
      Provides block-level access to storage devices via the network.
      Expensive, but provides high performance
    - iSCSI (Internet Small Computer System Interface):
      SAN-like access via the IP-network: protocol via TCP/IP

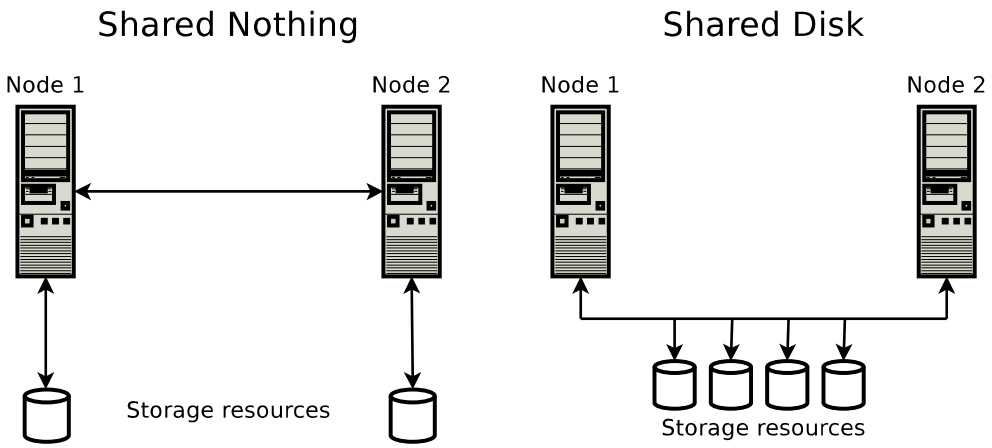

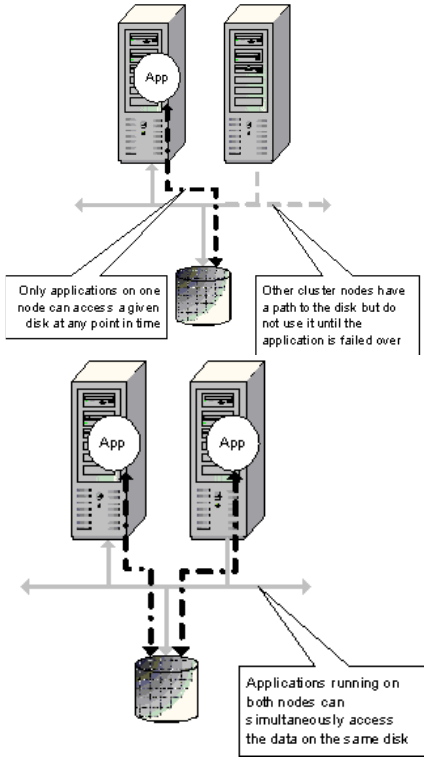

Server Clusters

- Scalability: remain to be effective and efficient when there is a significant increase in number of users and workload
  - Horizontal scalability vs. Vertical scalability
- Horizontal scalability:
  - scale by adding more machines into your pool of resources
- Vertical scalability:
  - scale by adding more power (CPU, RAM) to your existing machine
- Think of a machine on a server rack, we add more machines across the horizontal direction and add more powerful machines in the vertical direction

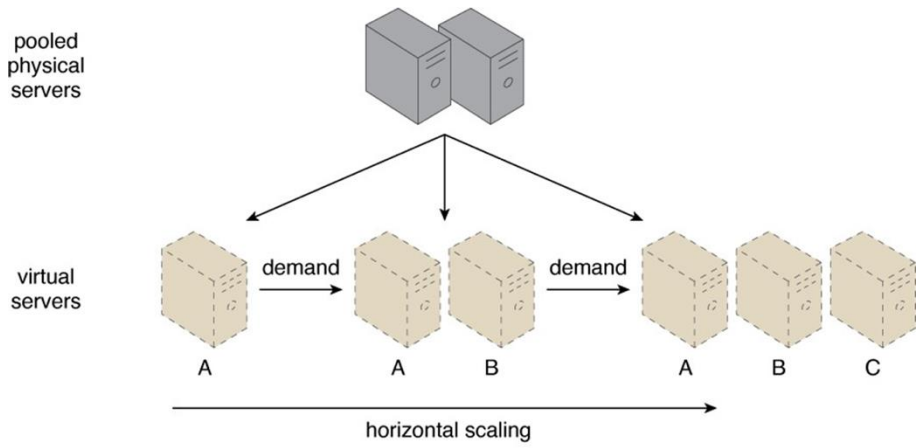

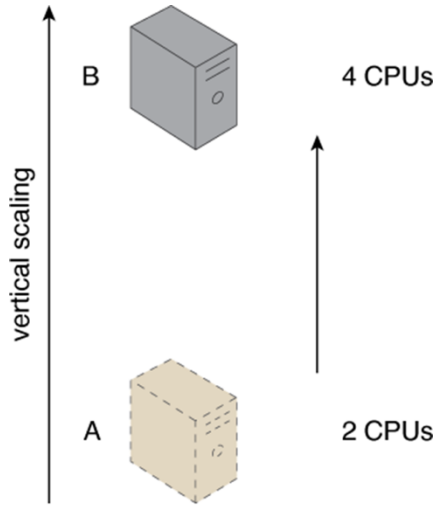

Server Clusters

Q&A Why do we need server clusters?

Data Center

- A data center is a facility used to host physical computers, storage and network resources
  - Built on top of computer clusters – Clustered Cloud Servers
- Cloud service providers use data centers to house cloud services and cloud-based resources
  - often own multiple data centers in several geographic locations to safeguard data availability during outages and other failures, and to achieve location-awareness and load balancing.

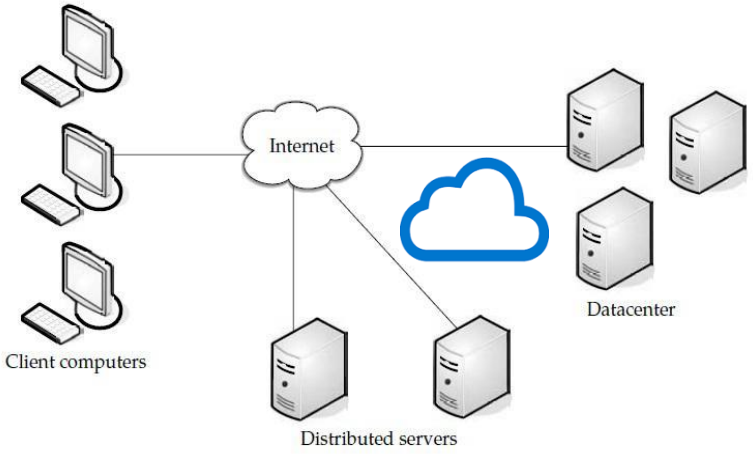

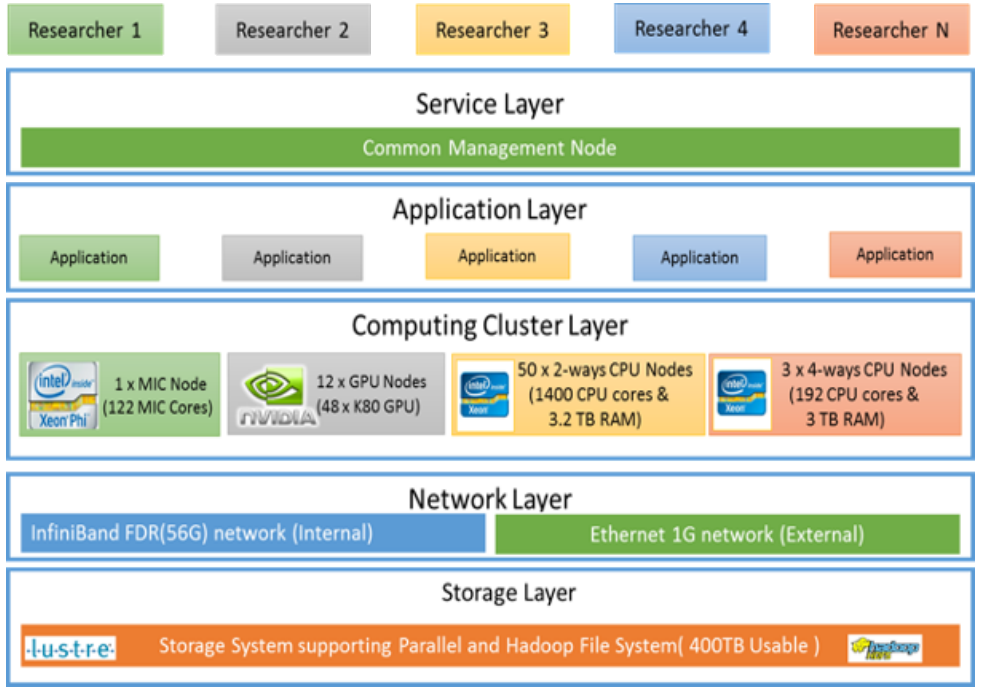

Data Center

COOLING: High-efficiency water-based cooling systems–less energy-intensive than traditional chillers–circulate cold water through the containers to remove heat, eliminating the need for air-conditioned rooms.

STRUCTURE: A 24 000-square-meter facility houses 400 containers. Delivered by trucks, the containers attach to a spine infrastructure that feeds network connectivity, power, and water. The data center has no conventional raised floors.

POWER: Two power substations feed a total of 300 megawatts to the data center, with 200 MW used for computing equipment and 100 MW for cooling and electrical losses. Batteries and generators provide backup power.

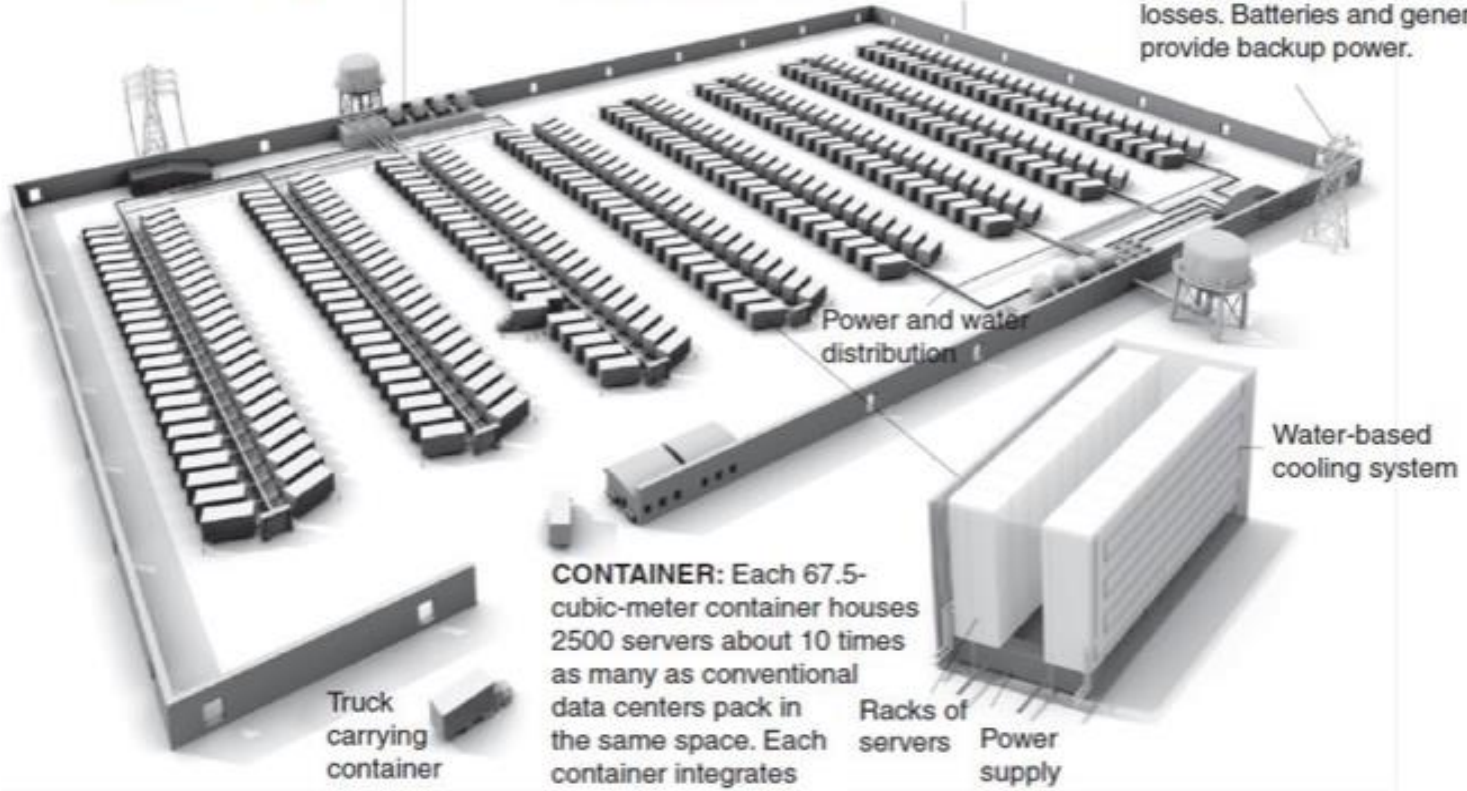

CONTAINER: Each 67.5-cubic-meter container houses 2500 servers about 10 times as many as conventional data centers pack in the same space. Each container integrates computing, networking, power, and cooling systems.

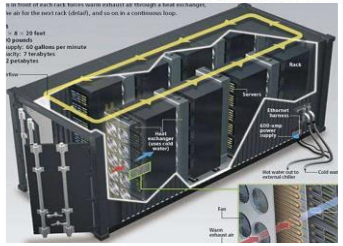

Data Center

- Cloud service providers usually build their own data centers, but they can also “buy” one from data center providers.
- NTT’s RagingWire: US premier data center provider

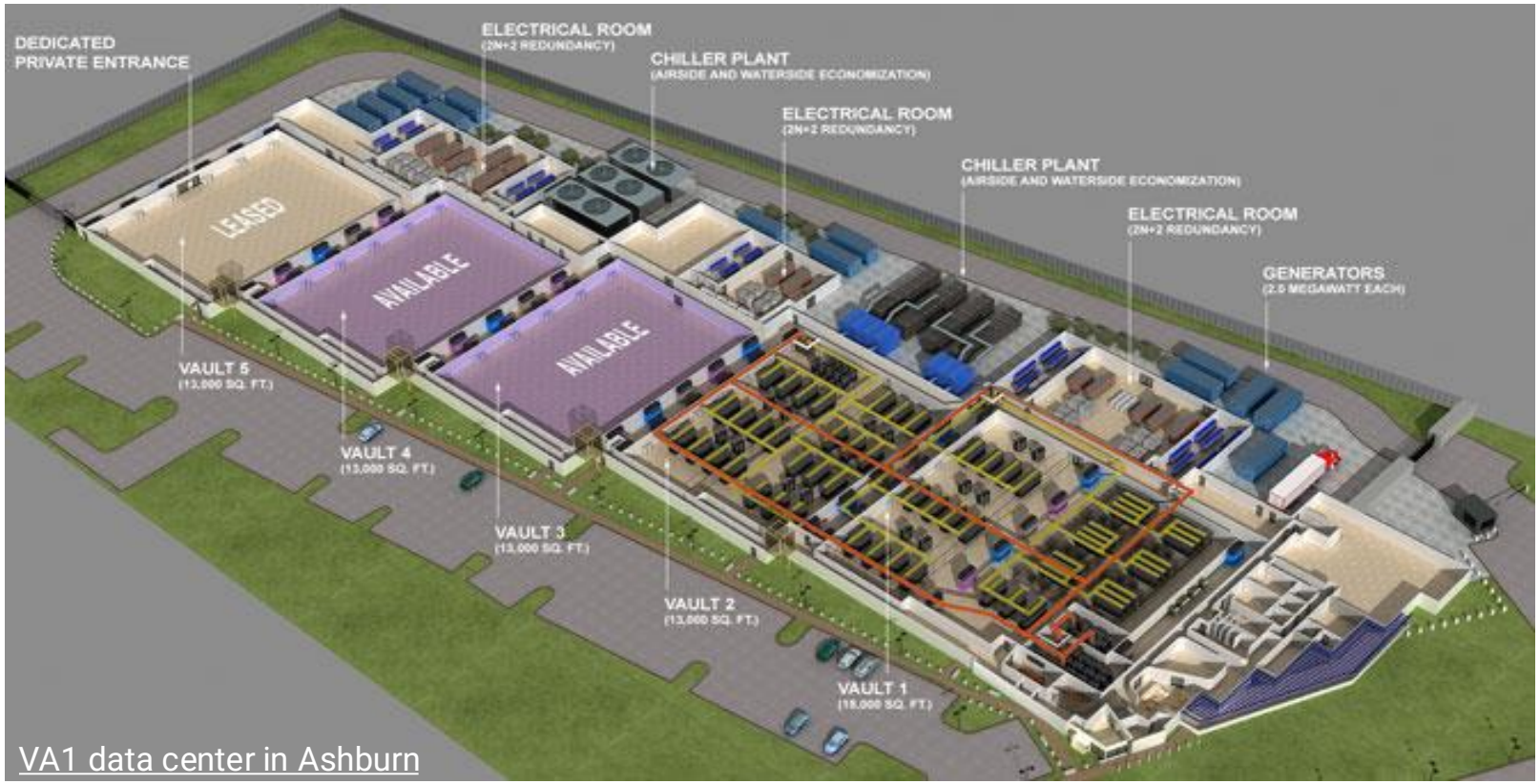

VA1 data center in Ashburn

https://www.ragingwire.com/news/ragingwire-announced-three-new-turn-key-data-center-space

Data Center Challenges

- Large-scale
  - 10’s to 100’s of thousands of servers
  - high bandwidth and low latency
- Complexity
  - plethora of components
  - plethora of software and hardware failures
- Availability and high performance
  - 99.99X% availability
  - redundancy of all critical components
- Security and performance isolation
  - controlled access to the infrastructure
  - data security
  - failure propagation

Data Center Network Design

- Inside a data center, a large number of computing and storage nodes are interconnected by a specially designed network, called data center network.
  - The data center network infrastructure interconnects nodes (racks) in a data center and across data centers

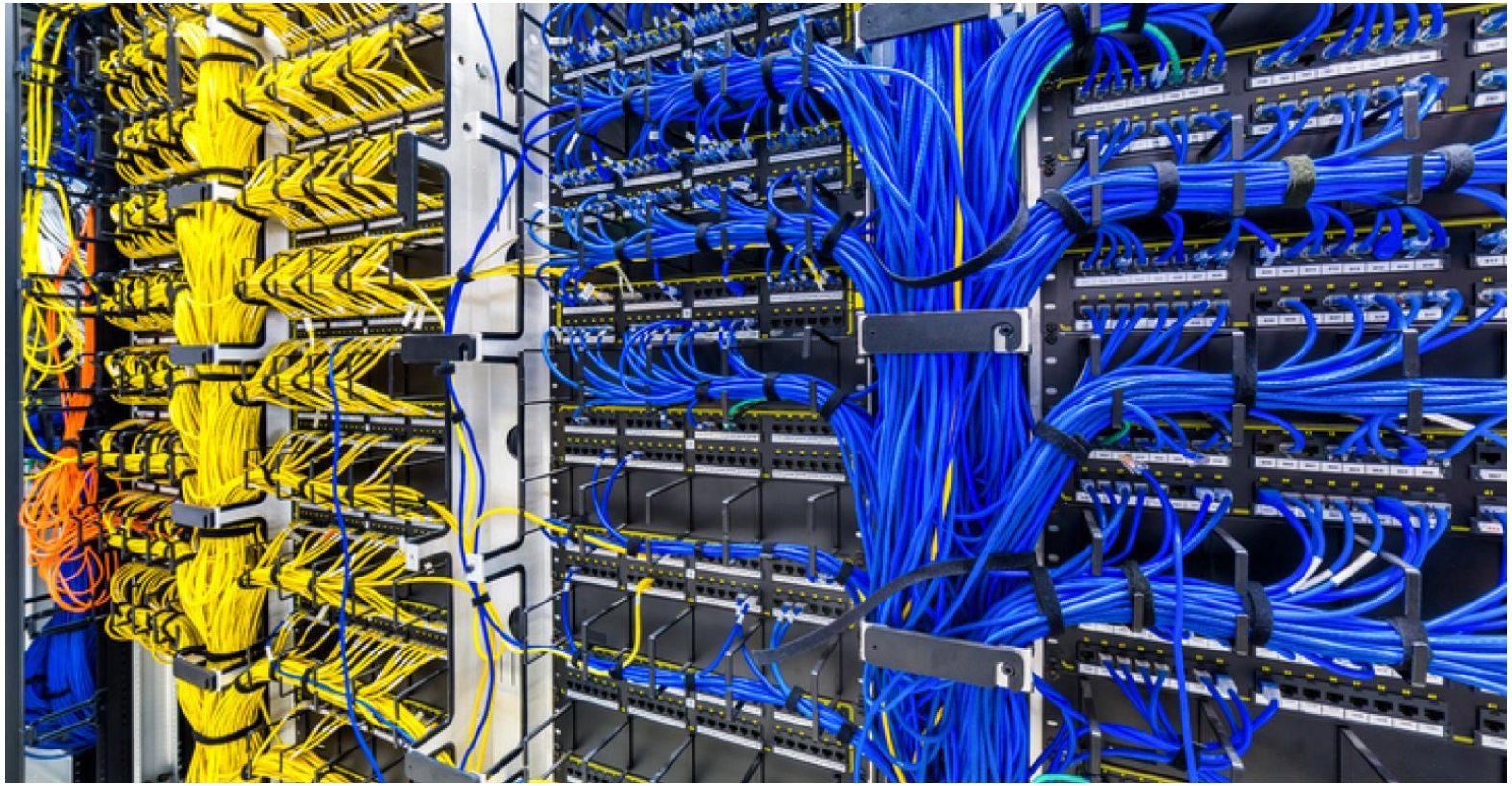

Data Center Network Design

- Inside a data center, a large number of computing and storage nodes are interconnected by a specially designed network, called data center network.
  - The data center network infrastructure interconnects nodes (racks) in a data center and across data centers

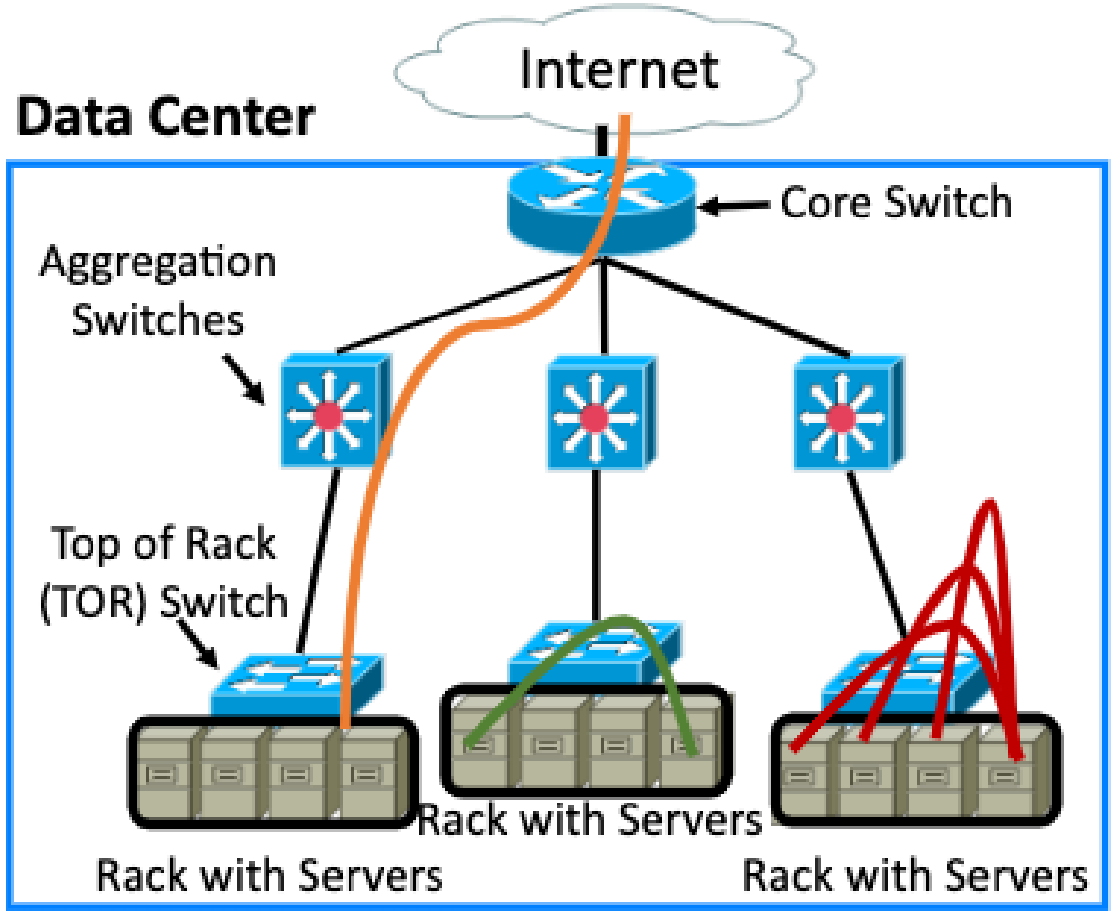

Common traffic patterns

North-south

- common with web sites

East-West

- common with back-end of web sites/ web services
- common in Big Data

Many-to-one

- causes TCP incast

Data Center Network Design

- Intra data center networks
  - Node operation mode:
    - Ethernet-switching mode vs. IP-routed mode
  - Network connection links (Q&A Pros and Cons?):
    - Electrical element based, e.g, copper-wired
    - Electrical and optical element based, e.g. fiber
    - Electrical and wireless element based
  - Switch-centric topologies
    - Switches take main responsibility in network construction and data transmission
    - Switches are usually connected by hierarchy topologies; servers are endpoints.

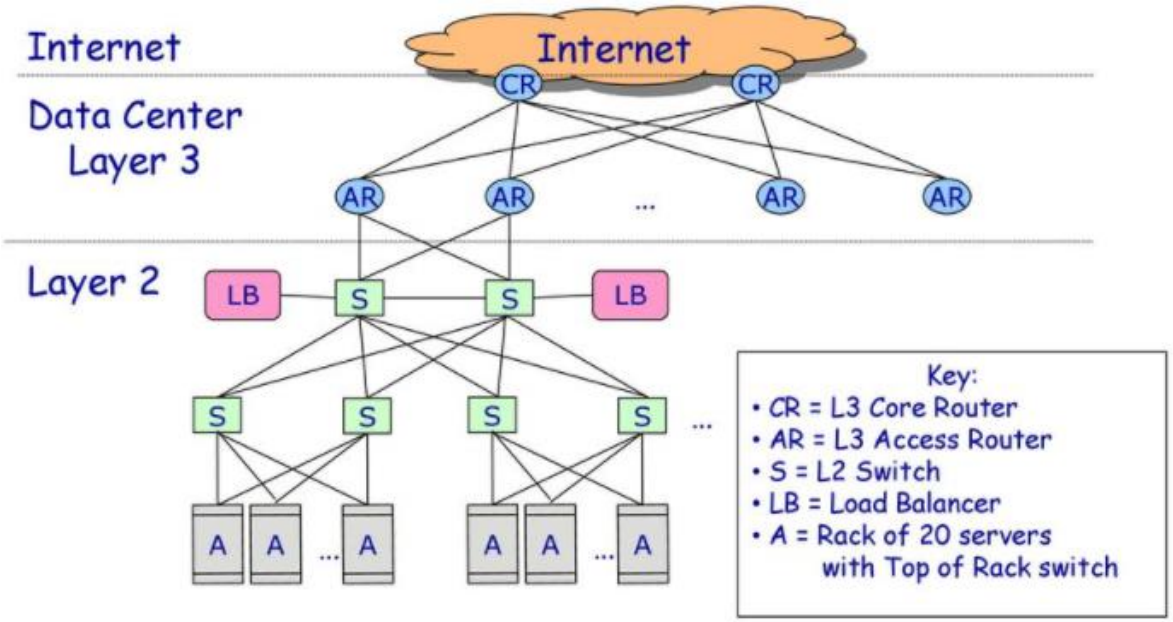

Data Center Network Design

- Traditionally, data center networks have been built in layers like a hierarchical tree.
  - Access layer: the bottom of the tree, where nodes connect to network.
  - Aggregation layer: middle layer connecting to access layer redundantly.
  - Core layer: the top layer providing routing service to other parts of the data center, services outside of the data center such as the Internet, geographically separated data centers, etc.
  - This model scales somewhat well, but is subject to bottleneck if uplinks between layers are oversubscribed.

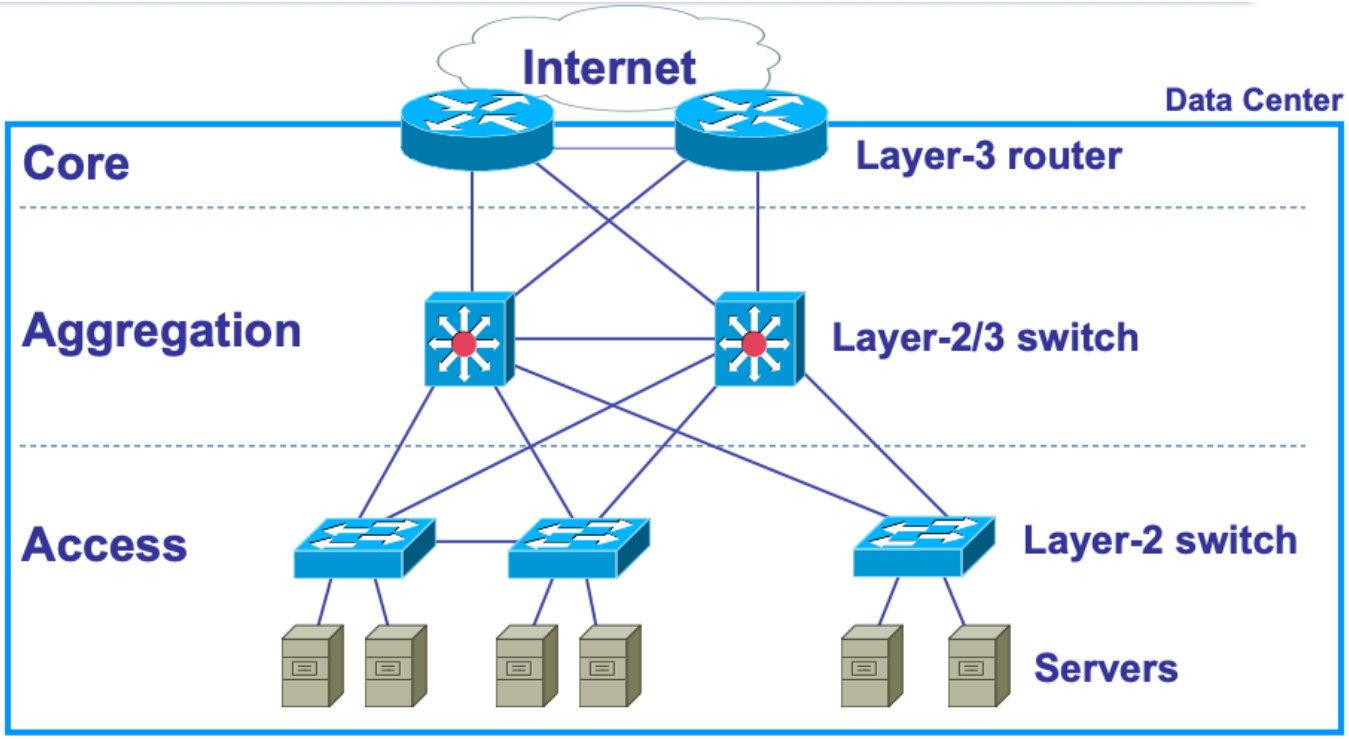

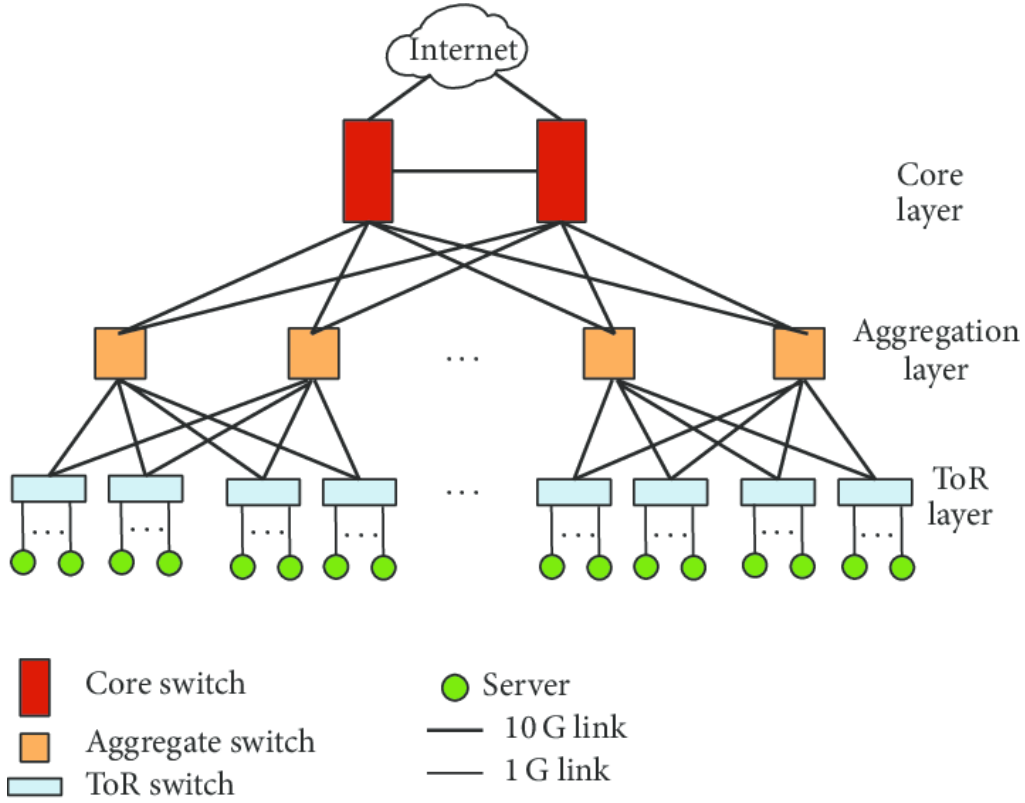

Data Center Network Design

- Now, it moves from tree to leaf: leaf-spine design (also called CLOS design)
  - The access layer is formed with a set of leaf switches, which are fully meshed to a set of spine switches
  - No direct spine-to-spine or leaf-to-leaf connection
  - Access-layer switches are no more than two hops away from one another, minimizing latency and bottlenecks.

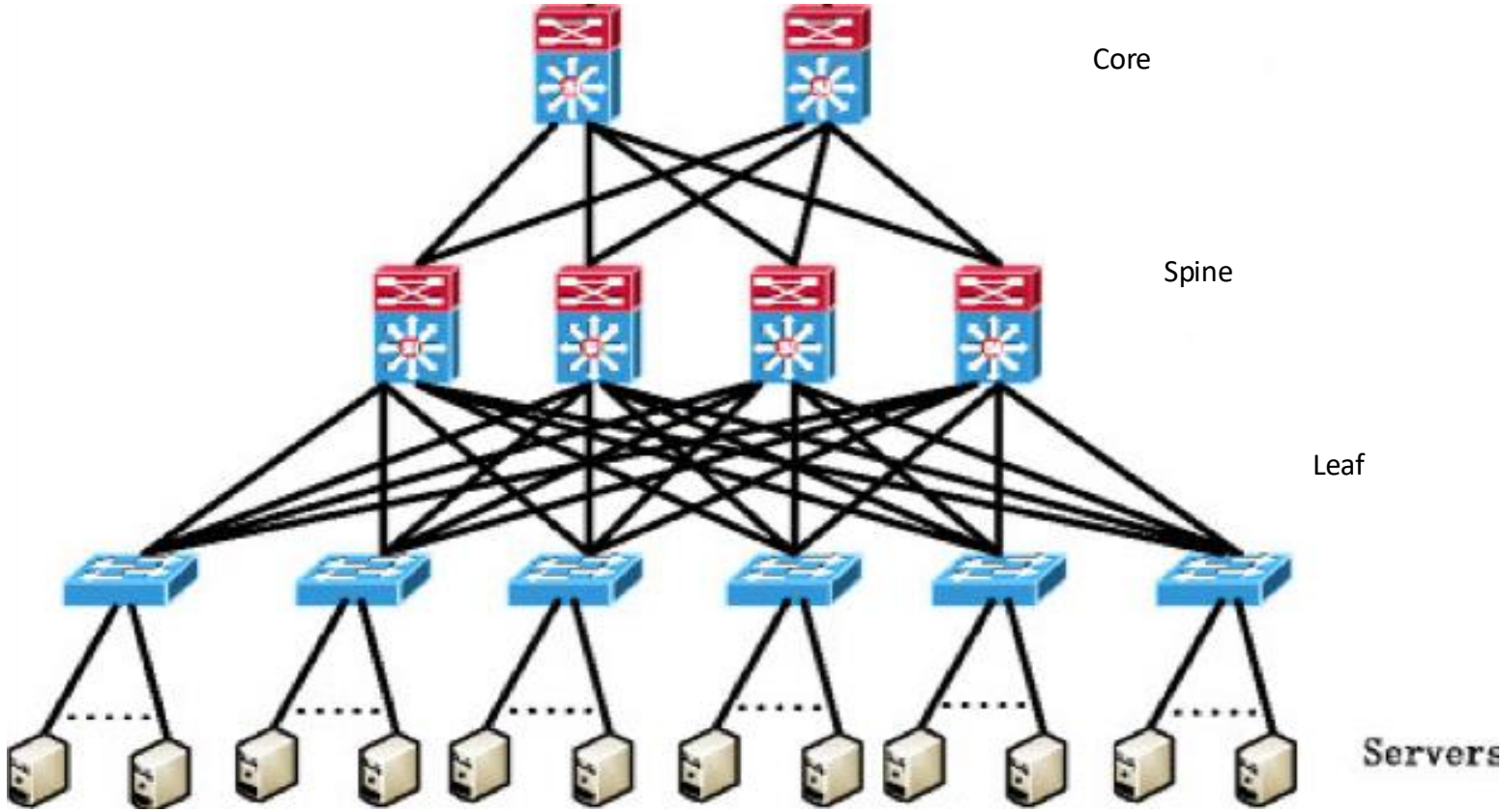

Data Center Network Design
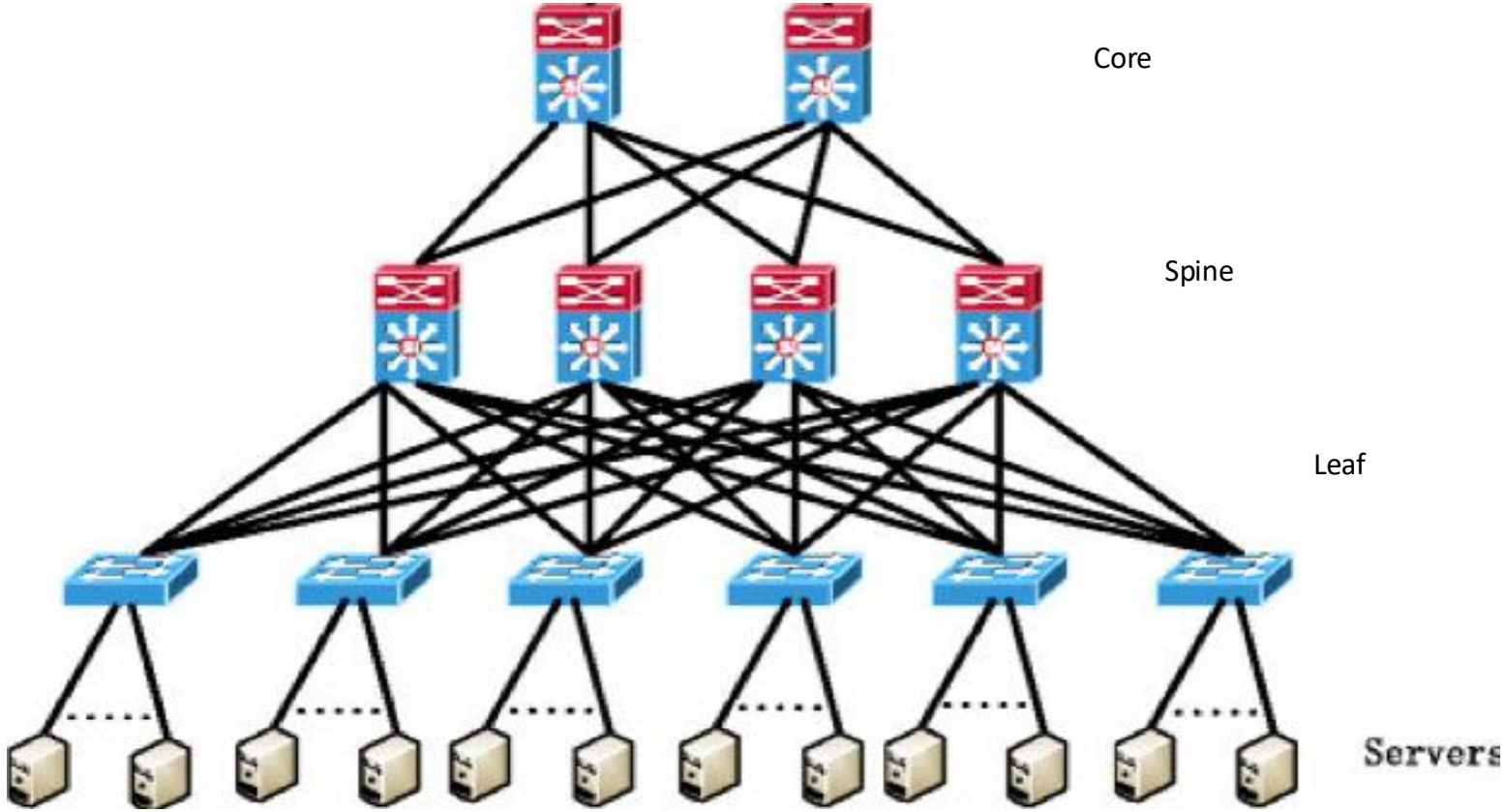
- Q&A Any Other Ideas?